PRESSURE PLATES, SHOCK ABSORBING

2480.015.

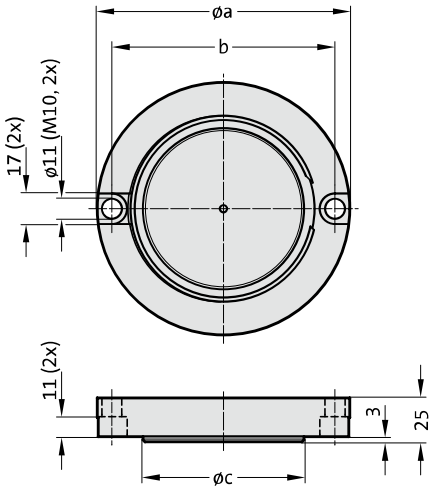

Mounting example

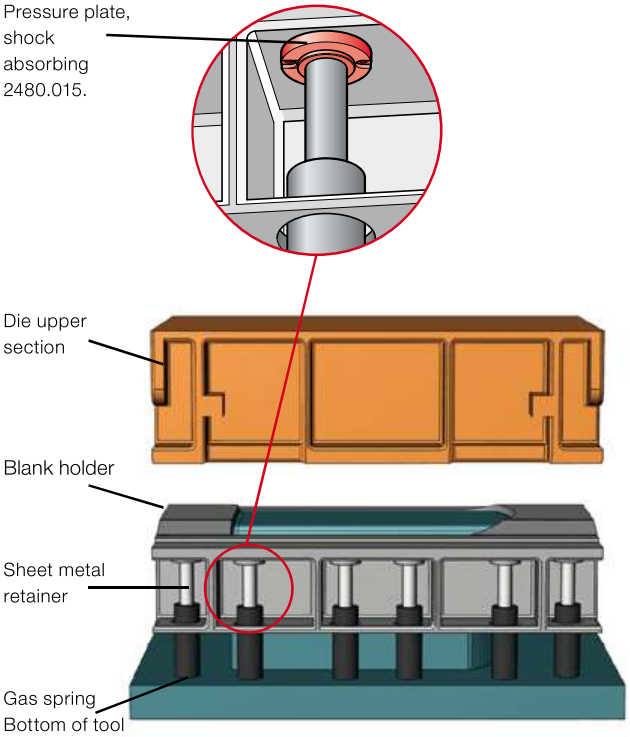

2480.015. Pressure Plates, shock absorbing

Order No.	Gas spring strength	a	b	c
2480.015.01500	750 – 1500	108	91	58
2480.015.05000	> 1500 – 6600	143	126	92
2480.015.10000	> 6600 – 10600	167	150	112

Description:

The shock absorbing pressure plate is designed to minimise the main problems in the metal forming industry.
Factors such as
- extreme shock load
- this means high press maintenance costs
- high noise level
- reduced parts quality

are reduced by a specially developed damping element.
Guidelines for using shock absorbing pressure plates with gas springs:
1. After the maximum shock absorbing travel of 3 mm the gas spring will reach the same initial spring force as it would without the shock absorbing pressure plate.
2. The shock absorbing pressure plate is mounted between the tool and the piston rod of the gas spring.

Material:

Steel, nitride
Polyurethane

Note:

Working temperature:	0 °C to 80 °C
recommended max. strokes/min.:	20
max. pressing speed:	1.6 m/s
max. shock absorbing travel:	3 mm

Function

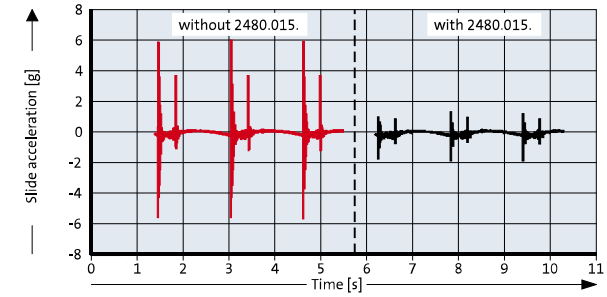

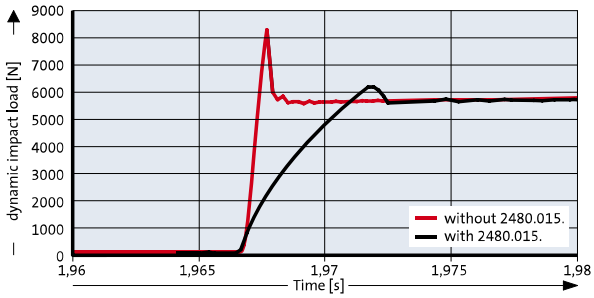

THRUST PAD
PRESSURE PLATE

2480.004.

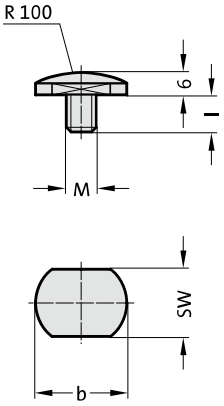

2480.004. Thrust Pad

Order No	Socket cap screw DIN EN ISO 4762	SW	b	l
2480.004.06	6	17	20	6
2480.004.08	8	19	22.5	11

Description:
Trust pad for gas springs with M6 and M8 thread in the piston rod, not for 2480.13.00500.□□□.

Material:
No 1.7131, case-hardened

Attention:
Can only be used for gas springs, standard 2480.12./13.!

2480.009.

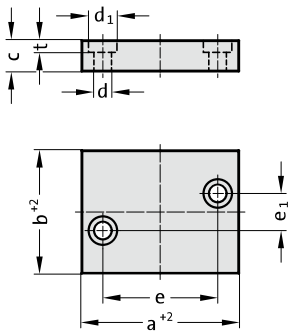

2480.009. Pressure plate

Order No*	max. piston rod diameter	a	b	c	d	d_1	e	e_1	t
2480.009.00250	15	50	25	12	7	11	32	8	7
2480.009.00500	20	55	30	12	7	11	40	14	7
2480.009.00500.1	20	55	32	16	9	15	37	0	9
2480.009.00750	25	70	35	15	9	15	48	14	9
2480.009.00750.1	36	65	50	16	9	15	47	0	9
2480.009.01500	36	75	50	15	9	15	56	30	9
2480.009.03000	50	85	60	15	9	15	66	40	9
2480.009.03000.1	50	80	60	16	9	15	62	0	9
2480.009.05000	65	100	80	20	11	18	72	56	11
2480.009.05000.2	65	102	80	20	11	18	80	0	11
2480.009.07500	80	110	100	20	11	18	85	75	11
2480.009.07500.2	80	117	100	20	11	18	95	0	11
2480.009.10000.1	90	132	100	20	11	18	110	0	11

*Execution .1/.2 to Volvo standard

Material:
No 1.2842, hardened
or
No 1.2379, hardened

2480.018.

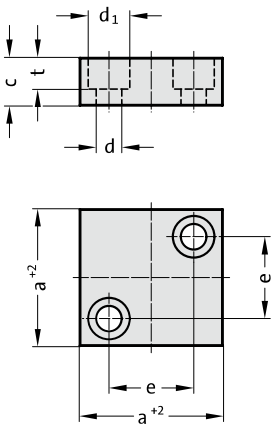

2480.018. Pressure plate

Order No	max. piston rod diameter	a	c	d	d_1	e	t
2480.018.01500	65	90	12	9	15	64	9

Material:
No 1.2842, hardened

PRESSURE PLATE
PRESSURE PLATE TO RENAULT STANDARD

2480.019. **Pressure plate**

Order No*	max. piston rod diameter	a	c	d	d_1	e	t
2480.019.00100	15	40	15	9	15	21	10
2480.019.00100.2	15	40	15	7	11	24	7
2480.019.00750	25	56	20	11	18	32	13
2480.019.03000	50	71	20	11	18	48	13
2480.019.03000.2	50	70	15	9	15	50	9
2480.019.03000.1	80	90	20	11	18	67	13
2480.019.07500.2	80	90	15	9	15	70	9
2480.019.07500	95	140	20	11	18	110	13

*Execution .2 to VDI 3003

Material:
No 1.2842, hardened
or
No 1.2379, hardened

2480.019.

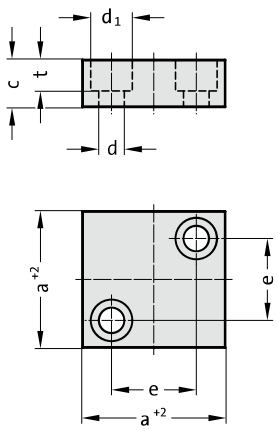

2480.019.45. **Pressure plate to Renault standard**

Order No	Shape	max. piston rod diameter	a	e	d
2480.019.45.00750	A	50	70	50	11
2480.019.45.01500	A	80	90	70	11
2480.019.45.03000	B	95	105	85	11
2480.019.45.05000	B	95	125	105	11
2480.019.45.07500	B	95	150	125	13
2480.019.45.10000	B	95	190	165	13

Material:
No 1.2842, hardened
or
No 1.2379, hardened

2480.019.45.

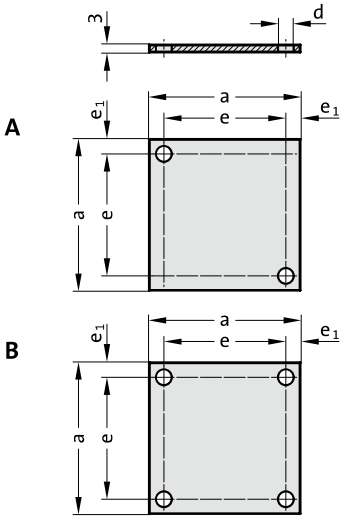

Description:
The hardened thrust pad 2480.004. reduces side forces in cases of skew thrust vaces or lateral displacement component.

In conjunction with the thrust pads, the hardened thrust plates 2480.009., 2480.018. and 2480.019. further helps to protect the gas spring from lateral forces, through reduction of friction – even when used without the thrust pad.

Note:
Especially with gas springs of large stroking capacity we recommend the use of the pad plate combination!
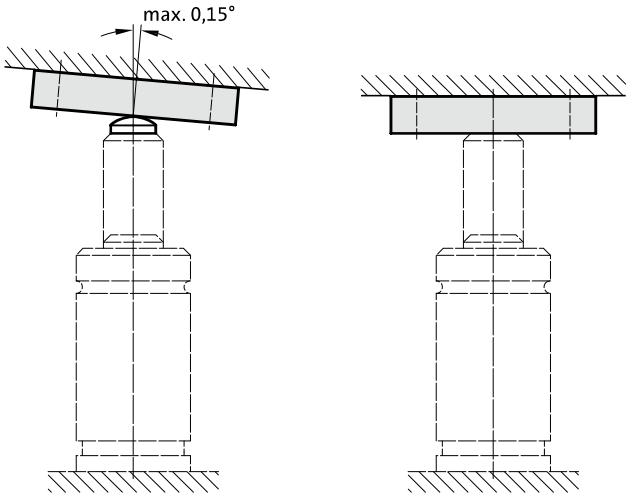
Mounting example